easyremote

digital programmable room controllers

altecnic
Caleffi group

easyremote digital programmable room controllers

Introduction

The Altecnic Easyremote digital programmable room controller has 7 day functions which allows operating times and temperatures to be set throughout the week.

The controller has a big, clear LCD display so as to monitor all functions in real time.

The Easyremote controller sends operating commands by means of OpenTherm communication protocol.

The Easyremote controller is electrically wired to the boiler by means of two nonpolarised conductors,which give the controller the necessary electrical power to operate and also the communication between the boiler.

After installation the controller is immediately ready to controller the boiler using its default program, which can be changed according to the needs of the user.

The controller is easy to program.

The controller has 2 daily ON periods, DAY (morning) and NIGHT (evening), the time and duration of which can be altered and each day can be individually programmed.

3 pre-set programs are already set in the controller's permanent memory (winter, summer and heating only), designed to provide maximum comfort.

Additional Features

- Set program or manual operation
- The day, hours and minutes can all be changed
- Viewing the current time or room temperature
- Weather compensation probe option available
- Manual setting of the room setting
- Hot water storage program for summer if system has a storage cylinder
- Room anti-freeze protection always on (the boiler must be operating)
- Fault display.

Dimensions

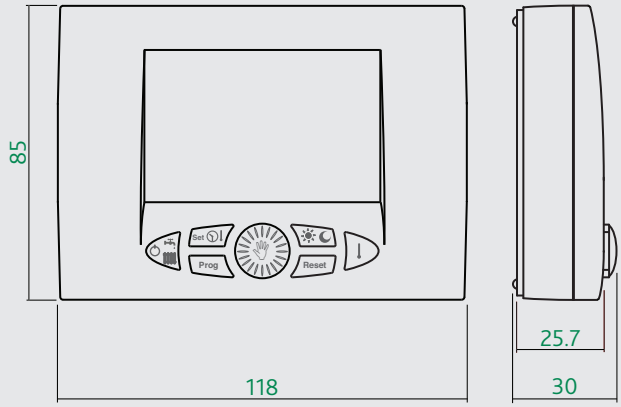

Technical Specification

Supply:	by communication bus
Number of temperature levels:	2 (DAY/NIGHT)
Temperature setting range:	NIGHT 5 to 30°C
Temperature setting range:	MANUAL 5 to 30°C
Differential operation temperature:	OFF 0.0 to 1.0°C
Differential operation temperature:	ON -1.0 to -0.1°C
Correct working range room temperature probe:	-40 to 50°C
Temperature resolution:	0.1°C
Room anti-frost start temperature range:	0.1 to 10°C
Room anti-frost end temperature:	start value + 0.6°C
Timer programmer resolution:	30 minutes
Maximum number of startings and shutdowns per day:	48
Number of standard heating programs:	1
Number of standard storage tank programs:	1
Internal clock time retention in case of power loss:	1 hour
Operating temperature range:	0 to 50°C
Stocking ambient temperature:	-10 to 50°C
Size (L×H×D):	118×85×30 mm
Maximum cable length for boiler connection:	50 metre
Cable section for boiler connection:	0.5 to 1.5 mm^2

Screen Functions and LCD Symbols

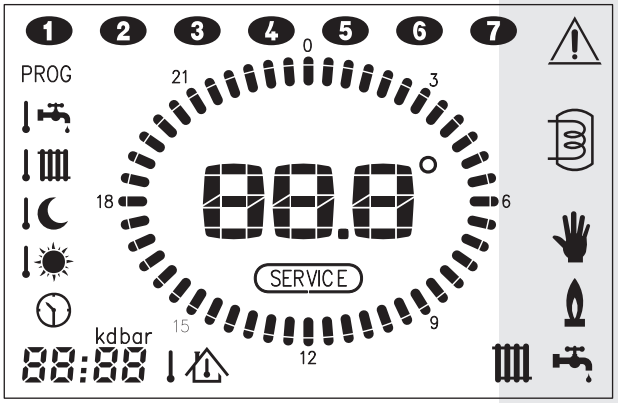

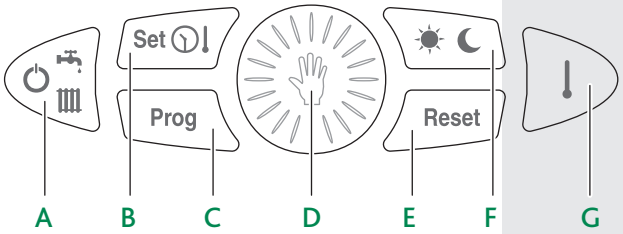

Keys

A		Select operation status
B		Set time and temperature
C		Weekly program
D		Change displayed value (turn) Select automatic / manual (press)
E		Alarm reset
F		Select temperature level (day/night)
G		Temperature display

ICON	STEADY	FLASHING
88.8°	Current temperature	Fault Code
88:88	Time/temperature	
1…7	Current day of the week	Change day of the week
	Domestic hot water enabled	Domestic hot water required
	Heating enabled	Heating requested
	Manual mode	
	Burner on	
PROG	Heating program	Change heating program
PROG +	Storage tank program	Change storage tank program
	Current room set point	Temporary change room set point
	Outside temperature	
bar	System pressure	

ICON	STEADY	FLASHING
		Set time and day of the week
		Set day temperature
		Set night temperature
	Heating temperature	Set heating temperature
	Domestic hot water temperature	Set domestic hot water temperature
kd		kd value
	Current temperature level = day	
	Current temperature level = night	
	Fault, no more attempts left for restoring	Fault - restore attempts available
SERVICE	Fault requiring technical service	
	Night level	
	Day level	

Altecnic Ltd Mustang Drive, Stafford, Staffordshire ST16 1GW
T: +44 (0)1785 218200 E: sales@altecnic.co.uk
Registered in England No: 2095101
altecnic.co.uk

AL 229 01-04-19
E & O.E
© Altecnic Limited. 2015
ALTECNIC™

altecnic
Caleffi group